Optimal Selection of SSSC Based Damping Controller Parameters for Improving Power System Dynamic Stability Using Genetic Algorithm

A. Kazemi M. Ladjevardi M.A.S. Masoum
Department of Electrical Engineering
Iran University of Science & Technology
Tehran, Iran.

Abstract: *This paper proposes a new genetic-based approach for optimal selection of the Static Synchronous Series Compensator (SSSC) based damping controller parameters in order to shift the closed loop eigenvalues toward the desired stability region. Controller design is formulated as a nonlinear constrained optimization problem. For simultaneous improvement of objective function (system stability) and constraints (limits of controller gains), their combination is used as the fitness function. The work relies on Genetic Algorithms (to capture the near global solution), analysis of mode abservability (to select the effective feedback signal of the damping controller) and the theoretical analysis of a general Single-Machine Infinite-Bus (SMIB) power system, using its modified linearized Phillips-Heffron model installed with SSSC. Simulation results are presented to show the excellent performance of the proposed SSSC controller in damping the critical modes without significantly deteriorating the damping characteristics of other modes.*

Index Terms- SSSC, FACTS, genetic algorithm, damping controller, low frequency oscillations.

I. INTRODUCTION

Flexible Ac transmission Systems are recognized as a transmission transfer capacity enhancement solution, minimizing the gap between system (transient, voltage and small signal) stability limits and thermal limits. Many FACTS devices connected in shunt, series, and series-shunt configurations with or without a (magnetic and/or superconductive) storage element have been proposed and implemented [1-11].

SSSC is a solid-state controllable voltage source inverter that is connected in series with power transmission lines. With the injected voltage in quadrature with the line current and the capability of dynamically changing its reactance characteristics from capacitive to inductive, SSSC is very effective for power flow control [12]. In addition, an auxiliary stabilizing signal can be superimposed on its power flow control function to improve power system oscillations stability [13].

Eigenvalue techniques have been commonly used in the design of power system controllers [14-16]. However, these techniques only consider the critical modes in the calculation of feedback gains that can introduce a significant deterioration in the damping of the non-critical modes. To avoid such problems, the following important issues must be addressed in the selection of controller gains:

- Improvement in the damping of the critical modes while minimizing any deterioration in the damping of the other modes.
- The operation limits of the SSSC.

One way for achieving the required performance while accommodating the aforementioned conditions is to consider the design of controllers as a constrained optimization problem. The constraints include limits of controller gains. Most traditional optimization methods move from one point in the decision hyperspace to another using some deterministic rule. The problem with this is that it is likely to get stuck at a local optimum.

In this paper, to achieve a near global solution genetic algorithm is proposed and used. GA starts with a diverse set (population) of potential solutions (hyperspace vectors). This allows for exploration of many optimums in parallel, lowering the probability of getting stuck at a local optimum [17-19]. Using a combination of eigenvalues and the controller parameters limits as fitness function, simultaneous improvement of system stability and constraints, are achieved. The main objectives of this paper are:

- Present a heuristic approach for optimal determination of SSSC based damping controller (such as gain and phase compensator parameters).
- To keep the values of controller parameters within specified limits.

These tasks are achieved using the analysis of mode abservability, genetic algorithm and the modified linearized Phillips-Heffron model (installed with SSSC).

II. SYSTEM INVESTIGATED

A single-machine infinite-bus (SMIB) power system installed with SSSC is investigated, as shown in figure 1 [7].

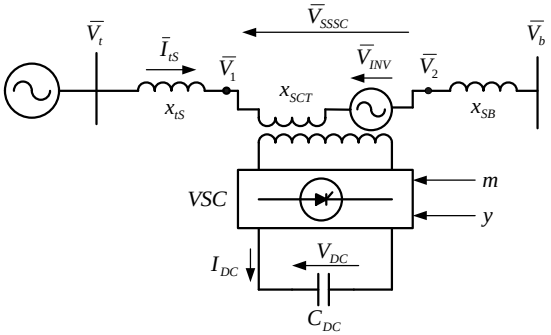

Figure 1. The single-machine infinite-bus (SMIB) power system with a SSSC used for the analysis.

The SSSC consists of a boosting transformer with a leakage reactance of X_{SCT}, a three-phase GTO based voltage source converter (V_{INV}) and a DC capacitor (C_{DC}). Signal m is the amplitude modulation ratio of the Pulse Width Modulation (PWM) based VSC, which is the input control signal to the SSSC and determines the magnitude of the inserted voltage. Also, signal y is the phase of the injected voltage and is kept in quadrature with the line current (inverter losses are ignored). Therefore, the compensation level of SSSC can be controlled dynamically by changing the magnitude of the injected voltage. Hence, if SSSC is equipped with a damping controller, it can be effective in improving power system dynamic stability.

A. The Modified Phillip –Heffron Model

The recommended model for SSSC to study power system dynamic stability is as follows [13]:

$$\bar{I}_{ts} = I_{tsd} + jI_{tsq} = I_{TS}\angle j$$

$$\bar{V}_{INV} = mkV_{DC}(\cos y + j\sin y) = mkV_{DC}\angle y \ ,$$

$$y = j \pm 90^\circ$$

$$\frac{dV_{DC}}{dt} = \frac{I_{DC}}{C_{DC}} = \frac{mk}{C_{DC}}(I_{tsd}\cos y + I_{tsq}\sin y) \qquad (1)$$

where k is the ratio between AC and DC voltages and depends on the inverter structure. The SSSC model of equation (1) may not be valid for transient phenomena and unsymmetrical conditions.

A linear model of a SMIB system including SSSC can be obtained by linearizing the nonlinear differential equations around a nominal operating point:

$$D\dot{d} = w_b Dw$$

$$\Delta\dot{w} = (-\Delta P_e - D\Delta w)/M$$

$$\Delta\dot{E}_q' = (-\Delta E_q + \Delta E_{fd})/T_{do}'$$

$$\Delta\dot{E}_{fd} = -(1/T_A)\Delta E_{fd} - (K_A/T_A)\Delta V_t$$

$$\Delta\dot{V}_{DC} = K_7\Delta d + K_8\Delta E_q' + K_9\Delta V_{DC} + K_{dm}\Delta m \quad (1)$$

where,

$$\Delta P_e = K_1\Delta d + K_2\Delta E_q' + K_{pDC}\Delta V_{DC} + K_{pm}\Delta m$$

$$\Delta E_q = K_4\Delta d + K_3\Delta E_q' + K_{qDC}\Delta V_{DC} + K_{qm}\Delta m$$

$$\Delta V_t = K_5\Delta d + K_6\Delta E_q' + K_{vDC}\Delta V_{DC} + K_{vm}\Delta m \qquad (2)$$

The corresponding state equations can be developed:

$$\begin{bmatrix} \Delta\dot{d} \\ \Delta\dot{w} \\ \Delta\dot{E}_q' \\ \Delta\dot{E}_{fd} \\ \Delta\dot{V}_{DC} \end{bmatrix} = \begin{bmatrix} 0 & w_b & 0 & 0 & 0 \\ -\frac{K_1}{M} & -\frac{D}{M} & -\frac{K_2}{M} & 0 & -\frac{K_{pDC}}{M} \\ -\frac{K_4}{T_{do}'} & 0 & -\frac{K_3}{T_{do}'} & \frac{1}{T_{do}'} & -\frac{K_{qDC}}{T_{do}'} \\ -\frac{K_A K_5}{T_A} & 0 & -\frac{K_A K_6}{T_A} & -\frac{1}{T_A} & -\frac{K_A K_{vDC}}{T_A} \\ K_7 & 0 & K_8 & 0 & K_9 \end{bmatrix} \begin{bmatrix} \Delta d \\ \Delta w \\ \Delta E_q' \\ \Delta E_{fd} \\ \Delta V_{DC} \end{bmatrix}$$

$$+ \begin{bmatrix} 0 \\ -K_{pu} \\ -K_{qu} \\ -K_{vu} \\ K_{dm} \end{bmatrix} [\Delta u] \qquad (3)$$

where,

$$K_{vu} = \left[\frac{K_A K_{vm}}{T_A}\right], \quad K_{qu} = \left[\frac{K_{qm}}{T_{do}'}\right], \quad K_{pu} = \left[\frac{K_{pm}}{M}\right], \quad [\Delta u] = [\Delta m]$$

and

$$[\Delta y] = \begin{bmatrix} K_1 & 0 & K_2 & 0 & K_{pDC} \end{bmatrix} \begin{bmatrix} \Delta d \\ \Delta w \\ \Delta E_q' \\ \Delta E_{fd} \\ \Delta V_{DC} \end{bmatrix} + \begin{bmatrix} K_{pm} \end{bmatrix} \begin{bmatrix} \Delta u \end{bmatrix} \quad (4)$$

In the above equations the output signal is assumed to be the active power delivered along the line, that is: $[\Delta y] = [\Delta p_e]$.

Open-loop eigenvalues are calculated using the state matrix of equation 3.

Figure 2 illustrates the small perturbation transfer function block diagram of a SMIB system installed with a SSSC. Constants of the model depend on system parameters and the operating condition. Signal m is the modulating index of inverter and is assumed to be the control signal of SSSC. So that, the magnitude of series injected voltage can be controlled and the desired dynamic compensation of reactive power will be achieved.

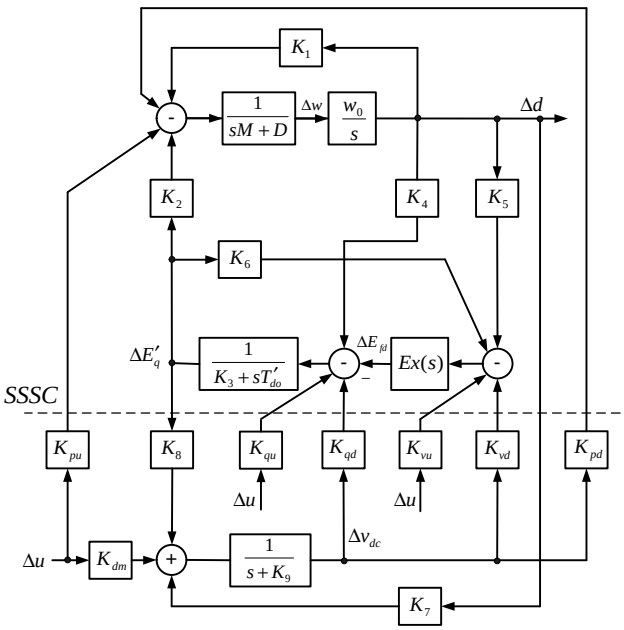

Figure 2. Modified Phillips-Heffron model of a SMIB system with SSSC.

III. DESIGN OF DAMPING CONTROLLER

The damping controller is designed to improve the damping torque. The structure of SSSC based damping controller is shown in figure 3 [11]. It consists of gain, signal wash out and phase compensator blocks. The block of signal wash out is a high pass filter that modifies the SSSC input signal and prevents steady changes in active power. Therefore, T_W should have a large value to allow signals associated with active power oscillations pass unchanged. The value of T_W is not critical and may be in the range of 1 to 20 seconds. Here it is assumed to be equal to 10. Values of controller parameters should be kept within specified limits. In this paper a genetic algorithm is proposed for the optimal computation of phase compensator block parameters and the gain value.

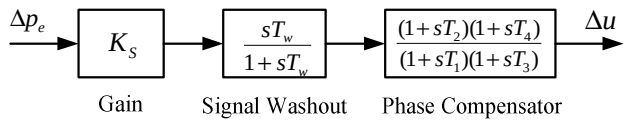

Figure 3. SSSC based damping controller.

It is evident from figure 3 that the locally available active power delivered along the line is used as the feedback signal of the damping controller. This signal is selected using analysis of mode observability

With application of the above dynamic controller, the number of state variables will be increased from 5 to 8.

IV. GENETIC ALGORITHM

For optimal determination of the damping controller parameters a genetic algorithm (GA) is proposed and used.

Genetic algorithm uses the principle of natural evolution and population genetics to search and arrive at a high quality near global solution [17-19]. The required design variables are encoded into a binary string as a set of genes corresponding to chromosomes in biological systems. Unlike the traditional optimization techniques that require one starting point, they use a set of points as the initial condition. Each point is called a chromosome. A group of chromosomes are called a population. The number of chromosomes in a population is usually selected between 30 to 300 (e.g., 250 in this paper). Each chromosome is a string of binary codes (genes) and may contain substrings. The merit of a string is judged by the fitness function, which is derived from the objective function and is used in successive genetic operations. During each iterative procedure (referred to as generation), a new set of strings with improved performance is generated using three GA operators (namely reproduction, crossover and mutation).

A. Structure of Chromosomes

In this paper, the chromosome structure for GA consists of 5 substrings of binary numbers where 5 denotes the number of constant parameters in the SSSC based dynamic controller (except T_W, which is assumed to be equal to 10). The binary numbers indicate the value of each parameter and the length of each substring is 8 bites. Figure 4 illustrates the proposed structure of each chromosome.

011….111	**101….101**	…	**110…….110**
Substring (For gain K_s)	**Substring (For T_1)**	:::	**Substring (For T_4)**

Figure 4. Proposed chromosome structure for the genetic algorithm.

B. Tthe Proposed Fitness Function

The main object of the control system is to increase the damping of critical modes without deteriorating of the non-critical modes. Real parts of the closed loop eigenvalues determine system-damping modes and must be included in the objective function [11]. In addition, magnitudes of the controller gains should be kept within the specified limits. Therefore, the objective function is formulated as follows:

$$\begin{cases} C = \sum_i P^{li} + P^{fj} \\ subject\ to \quad |f_j| \le f_{j\max} \end{cases} \tag{5}$$

where P^{li} and P^{fj} represent the penalties related to the real part of the *i*th eigenvalue and the magnitude of controller gain j, respectively. Also, f_j and $f_{j\max}$ are the actual magnitude and limit of the controller gain j. They are defined as follows:

$$P^{li}\begin{cases} 0\ , & if\ \ s^i \le s^{id} \\ s^i - s^{id}, & otherwise \end{cases}$$

$$P^{fj}\begin{cases} 0\ , & if\ \ |f_j| \le f_{j\max} \\ |f_j| - f_{j\max}, & otherwise \end{cases} \tag{6}$$

s^i and s^{id} are the actual and desired values for the real part of the *i*th eigenvalue.

The inverse of the above objective function is used as the fitness function, except the case in which C equals to zero:

$$Fittness = \frac{1}{C}, \qquad C \ne 0$$

$$Fittness = A + \sum_j (f_{j\max} - |f_j|), \qquad C = 0 \tag{7}$$

where A is a large number.

Using the proposed fitness function, damping of all critical modes will be improved simultaneously without deteriorating the damping of non-critical modes. In addition, the prolonged saturation in the SSSC actuators is avoided.

C. Genetic Operators

Genetic operators are the stochastic transition rules applied to each chromosome during each generation procedure to generate a new improved population from an old one. A genetic algorithm usually consists of reproduction, crossover and mutation operators.

- **Reproduction-** is a probabilistic process for selecting two parent strings from the population of strings on the basis of "roulette-wheel" mechanism, using their fitness values. This ensures that the expected number of times a string is selected is proportional to its fitness relative to the rest of the population. Therefore, strings with higher fitness values have a higher probability of contributing offspring.
- **Crossover-** is the process of selecting a random position in the string and swapping the characters either left or right of this point with another similarly partitioned string. This random position is called the crossover point. In this paper the characters to the right of a crossover point are swapped. The probability of parent-chromosomes crossover is assumed to be between 0.6 and 1.0.
- **Mutation-** is the process of random modification of a string position by changing "0" to "1" or vice versa, with a small probability. It prevents complete loss of genetic material through reproduction and crossover by ensuring that the probability of searching any region in the problem space is never zero. In this paper the probability of mutation is assumed to be between 0.01 and 0.1.

D. Convergence Criterion

Iterations (regenerations) of the proposed genetic algorithm is continued until all generated chromosomes become equal or the maximum number of iterations is achieved (e.g., in this paper $N^{\max} = 100$).

V. SOLUTION METHODOLOGY

The selection of SSSC controller parameters is formulated as a nonlinear optimization problem (Eqs. 5-7) and is solved using the proposed genetic algorithm as follows:

Step 1: Input system parameters (e.g., constants of Phillips-Heffron model (Eq.2) with respect to the operating point). Determine the actual and the desired system eigenvalues (Eq.?).

Step 2: Input the initial population with N_{chrom} chromosomes (N_{chrom}=250) and set $N_{it} = 1$.

Step 3: Set initial counter values (e.g., $N_{ch} = 1$ and A= a large number).

Step 4 (Fitness Process):

Step 4A: Calculate and save the closed loop system eigenvalues using the parameters specified with chromosome N_{ch}.

Step 4B: Compute the proposed objective function (Eqs.5-6) and the corresponding fitness function (Eq. 7) for chromosome N_{ch}. Set $N_{ch} = N_{ch} + 1$.

Step 3C: If $N_{ch} \le N_{chrom}$ go to Step 4A.
Step 5 (Reproduction Process):
Step 5A: Define total fitness as the sum of all fitness values for all chromosomes.
Step 5B: Select a percentage of "roulette wheel" for each chromosome which is equal to the ratio of its fitness number to the total fitness number.
Step 5C: Improve generation by rolling the "roulette wheel" N_{chrom} times. Select a new combination of chromosomes.
Step 6 (Crossover Process):
Step 6A: Select a random number (RND_1) for mating two parent chromosomes.
Step 6B: If RND_1 is between 0.6 and 1.0 then combine the two parents, generate two offspring and go to Step 6D.
Step 6C: Else, transfer the chromosome with no crossover.
Step 6D: Repeat steps 6A to 6C for all chromosomes.
Step 7(Mutation Process):
Step 7A: Select a random number (RND_2) for mutation of one chromosome.
Step 7B: If RND_2 is between 0.01 and 0.1 then apply the mutation process at a random position and go to Step 7D.
Step 7C: Else, transfer the chromosome with no mutation.
Step 7D: Repeat Steps 7A to 7C for all chromosomes.

Step 8: (Updating Populations): Check all chromosomes, save the one with maximum fitness value, which satisfies constraints. Set $N_{it} = N_{it} + 1$ and replace the old population with the improved population generated by Steps 3 to 7.
Step 9 (Convergence): If all chromosomes are the same or the maximum number of iterations is achieved ($N_{it} = N^{\max}$), then print the solution and stop, else go to Step 3.

VI. SIMULATION RESULTS

The SMIB system of figure 1 (installed with SSSC) is investigated and a SSSC based dynamic controller is designed to improve the power oscillations damping. The nominal loading condition, system parameters and calculated Phillips-Heffron constants are given in the Appendix.

The open-loop eigenvalues are calculated using Eq.3 and the desired real parts of closed-loop eigenvalues for the investigated system are given in Table 1. It can be seen that mode 1 contains weak damping characteristics and is a critical mode, therefore, the desired value of its real part is –2. Mode 2 is not critical, however, it should be prevented from significantly deteriorating system dynamics by keeping its real part less than –2.

Table 1: Eigenvalues of the investigated system (Fig.1).

modes	**open-loop eigenvalues**	**desired real parts of eigenvalues** (s^{id})
1	$-0.038 \pm 4.29j$	-2
2	$-10.33 \pm 8.06j$	non-critical

The closed-loop system eigenvalues calculated with application of the proposed GA for optimal controller design (Fig.3) are shown in Table 2. With respect to the eigenvalue, it can be seen that the damping ratio of critical mode is increased from 0.008 to 0.28. The corresponding SSSC based controller parameters are determined using the proposed GA :
$K_s = 0.92,\ T_1 = 0.21,\ T_2 = .24, T_3 = 0.64,\ T_4 = 0.93.$
T_W is assumed to be equal to 10.

To illustrate the designed SSSC control scheme, a simulation program is developed. A small signal disturbance is imposed on the load active power for one second. Figure 5 shows system dynamic response and the performance of the proposed SSSC based dynamic controller following the disturbance. It can be seen that using the proposed GA, the angle of oscillations damping is improved. Also, the gains of the controller are kept within permissible limits (e.g., $K_{s\max} = 4, T_{\max} = 2$).

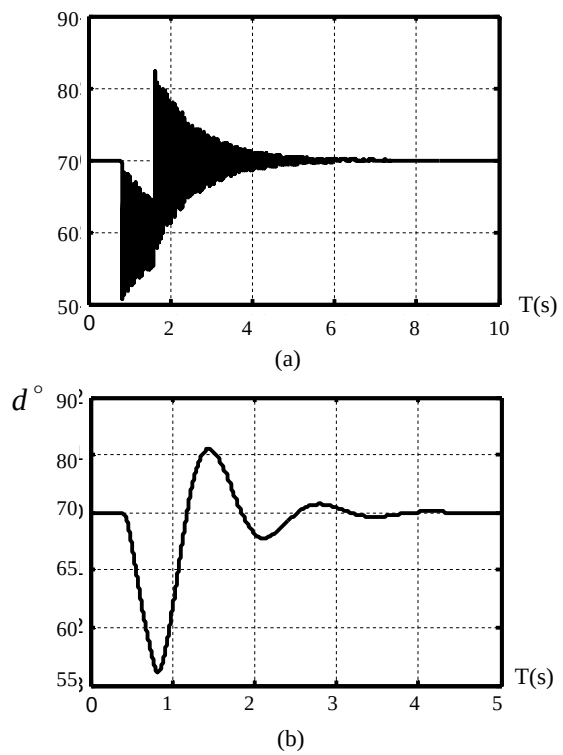

Figure 5. Performance of the proposed SSSC damping controller following a small signal disturbance on the active power line for one second without (a) and with (b) the dynamic controller.

Table 2: The new closed-loop Eigenvalues with the GA-based optimal controller design (Fig.3).

modes	closed-loop eigenvalues
1	$-2.73 \pm 9.33j$
2	$-4.97 \pm 4.11j$

VII. CONCLUSION

The problem of optimal selection of SSSC based damping controller parameters has been formulated as a nonlinear constrained problem and a new genetic algorithm has been proposed to capture its near global solution. Therefore, unlike pervious algorithms, the probability of getting stuck at a local optimum is nearly avoided. It is shown that in addition to improving the damping characteristics of critical modes, the proposed design procedure minimizes the deterioration in the non-critical modes while keeping the constraints within permissible region. The analysis of mode abservability is used to select the effective feedback signal of the damping controller. Optimal selection of a SSSC based dynamic controller parameters for a SMIB power system using GA is successfully performed. Simulation results are used to demonstrate the impact and effectiveness of designed controller in improving angle oscillations damping.

Appendix

Parameters used for the single-machine infinite-bus power system (in p.u., unless specified) are:

Generator parameters: M=9.26, D=4, T_{do}'=5s, x_d =0.973, x_q =0.55, x_d' =0.19,

Exciter parameters: K_A=50, T_A=0.05s,

Network and SSSC parameters: x_{total} =0.997, V_{Bo}=1.05, $d_o = 70.87^\circ$, C_{DC}=1, V_{DCo}=1.

References

[1] H.F. Wang, M. Li, F.J. Swift, "FACTS-Based Stabilizer Designed By the Phase Compensation Method. I. Single-Machine Infinite-Bus Power Systems. II. Multi-Machine Power Systems", Advances in Power System Control, Operation and Management, APSCOM-97, Fourth International Conference on (Conf. Publ. No. 450), Volume: 2, Nov. 1997, Page(s): 638 -649.

[2] F.J. Swift, H.F. Wang, "Application of the Controllable Series Compensator in Damping Power System Oscillations", Generation, Transmission and Distribution, IEE Proceedings- , Volume: 143, Issue: 4, July 1996, Page(s): 359 -364.

[3] H.F. Wang, "Phillips-Heffron Model of Power Systems Installed with STATCOM and Applications", Generation, Transmission and Distribution, IEE Proceedings- , Volume: 146, Issue: 5, Sept. 1999, Page(s): 521 -527.

[4] H.F. Wang, "Modeling STATCOM into Power Systems", Electric Power Engineering, PowerTech Budapest 99. International Conference on, 29 Aug.-2 Sept.1999, Page(s): 302.

[5] H.F. Wang, F.J. Swift, M. Li, "Selection of Installing Locations and Feedback Signals of FACTS-Based Stabilizers in Multimachine Power Systems by Reduced-Order Modal Analysis", Generation, Transmission and Distribution, IEE Proceedings- , Volume: 144 Issue: 3, May 1997, Page(s): 263 -269.

[6] H.F. Wang, "Damping Function of Unified Power Flow Controller", Generation, Transmission and Distribution, IEE Proceedings- , Volume: 146 Issue: 1, Jan. 1999, Page(s): 81 -87.

[7] H.F. Wang, F.J. Swift, "A Unified Model for the Analysis of FACTS Devices in Damping Power System Oscillations. I. Single-Machine Infinite-Bus Power Systems", Power Delivery, IEEE Transactions on, Volume: 12, Issue: 2, April 1997, Page(s): 941 -946.

[8] H.F. Wang, F.J. Swift, M. Li, "A Unified Model for the Analysis of FACTS Devices in Damping Power System Oscillations. II. Multi-Machine Power Systems", Power Delivery, IEEE Transactions on, Volume: 13, Issue: 4, Oct. 1998, Page(s): 1355 -1362.

[9] H.F. Wang, "A Unified Model for the Analysis of FACTS Devices in Damping Power System Oscillations III. Unified Power Flow Controller", Power Delivery, IEEE Transactions on, Volume: 15 Issue: 3, July 2000, Page(s): 978 -983.

[10] X.R. Chen, N.C. Pahalawaththa, U.D. Annakkage, C.S. Kumble, "Output Feedback TCSC Controllers to Improve Damping of Meshed Multi-Machine Power Systems", Generation, Transmission and Distribution, IEE Proceedings- , Volume: 144, Issue: 3, May 1997, Page(s): 243 -24.

[11] *X.R. Chen, N.C. Pahalawaththa, U.D. Annakkage, C.S. Kumble,* " Design of Decentralised Output Feedback TCSC Damping Controllers by Using Simulated Annealing", Generation, Transmission and Distribution, IEE Proceedings- , Volume: 145, Issue: 5, Sept. 1998, Page(s): 553 -558.

[12] *L. Gyugyi, C.D. Schauder, K.K. Sen,* "Static Synchronous Series Compensator: A Solid-State Approach to the Series Compensation of Transmission Lines", Power Delivery, IEEE Transactions on, Volume: 12, Issue: 1, Jan. 1997, Page(s): 406 -417.

[13] H.F. Wang, "Design of SSSC Damping Controller to Improve Power System Oscillation Stability", AFRICON, 1999 IEEE, Volume: 1, 28 Sept.-1 Oct. 1999, Page(s): 495 -500.

[14] E.V. Larsen, J.J. Sanchez-Gasca, J.H. Chow, "Concepts for Design of FACTS Controllers to Damp Power Swings", Power Systems, IEEE Transactions on, Volume: 10, Issue: 2, May 1995, Page(s): 948 -956.

[15] X.R. Chen, N.C. Pahalawaththa, U.D. Annakkage, C.S. Kumble, "Design of TCSC Controllers to Damp Power Swings by using Eigenvalue Analysis Method", IEEE/KTH Stockholm Power Tech. Conference, Stockholm, Sweden, pp.268-275, 18-22 June 1995.

[16] X.R. Chen, N.C. Pahalawaththa, U.D. Annakkage, C.S. Kumble, "Controlled Series Compensation for Improving Stability of Multi-Machine Power Systems", IEE Proc. Gener. Trnasm. Distrib., pp.361-366, July 1995.

[17] D.E. Goldberg, "Genetic Algorithms in Search, Optimization, and Machine Learning", New York: Addison-Wesley, 1989.

[18] J.D. Schaffer, J.D. Caruana, L.J. Eshelman, R. Das, "A Study of Control Parameters Affecting Online Performance of Genetic Algorithms for Function Optimization". Proceedings of the Third International Conference on Genetic Algorithms, San Mateo, CA: Morgan Kaufmann, pp. 51-60, 1989.

[19] L. Davis, "Handbook of Genetic Algorithms", Van Nostrand Reinhold: New York, 1991.